Traditional Pattern Knob

FTD515

AB ABB PE SB SN

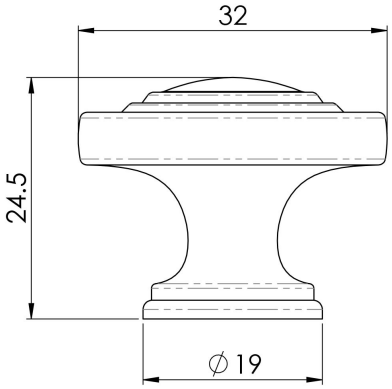

- We have added a satin brass finish
- a traditional round ringed pattern knob on a stem rose making it easy to grasp
- Provides a comfortable feel and good torque when opening doors and drawers
- Matching cupboard pull FTD555
- Matching cupboard handles FTD505 & FTD520
- 10yr Mechanical Guarantee

CARLISLE BRASS

+44 1228 511030
Carlisle Brass Ltd, Parkhouse Road, Carlisle, CA3 0JU
enquiries@carlislebrass.com
www.carlislebrass.com